PREMIER TABLE LINENS

800-937-1159

Fully Dye Sublimated 5’ Spandex Table Cover
Open Back / 3 Sided - 18”W x 60”L x 29”H

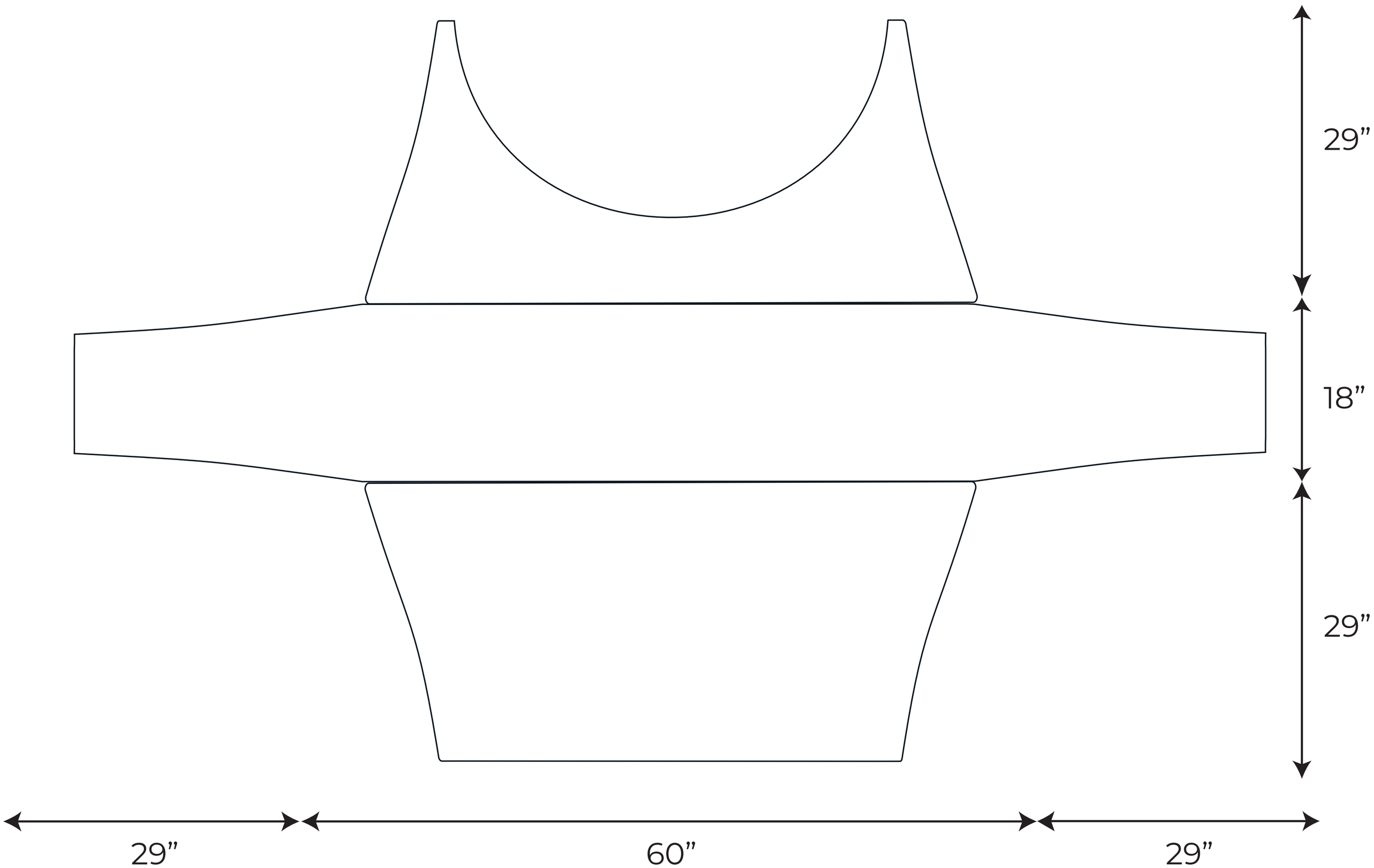

This proof is for content only. Images are subject to following the contour of the fabric after the tablecloth is stretched onto the table. Table leg pockets fit up to 1.5” diameter table legs.

This product is being printed digitally in 4 color process (CMYK). PMS numbers are used as a reference point and colors will be matched as close as the 4 color process can achieve, however it is not always an exact match. Do not expect the finished product to look like the colors displayed on your computer monitor. Reference a PMS number for graphic colors. If PMS numbers are not called out and the proof is approved on CMYK values only we will not accept returns for color discrepancies. It is recommended that PMS colors be assigned to spot color elements or a physical “match print” be provided if color is critical.

Full Dye Sublimated Spandex 5’ Table Cover / Open Back

Fits 18” x 60“ x 30” Table

Imprint Area: Full Cloth

Design Questions?

Contact our Art Department

via email: graphics@premiertablelinens.com

Print Project Information:

Date:

Quantity:

Cloth Color:

Graphic Size: ”L x ”H

Print Method:

SPOT ▢ ▢ ▢ ▢ ▢ **or** **CMYK**

please drop PMS colors into inkwells above

PLEASE:

Do not change template size.
Leave template CMYK.
Do not flatten template.
Place your art on ARTWORK LAYER

All fonts MUST be outlined
All critical elements must be within guide box
Noncritical elements may bleed to edge
Images should be at least 150 DPI and embeded