PREMIER TABLE LINENS

800-937-11

DIGITALLY PRINTED 21' BOX TABLE SKIRT

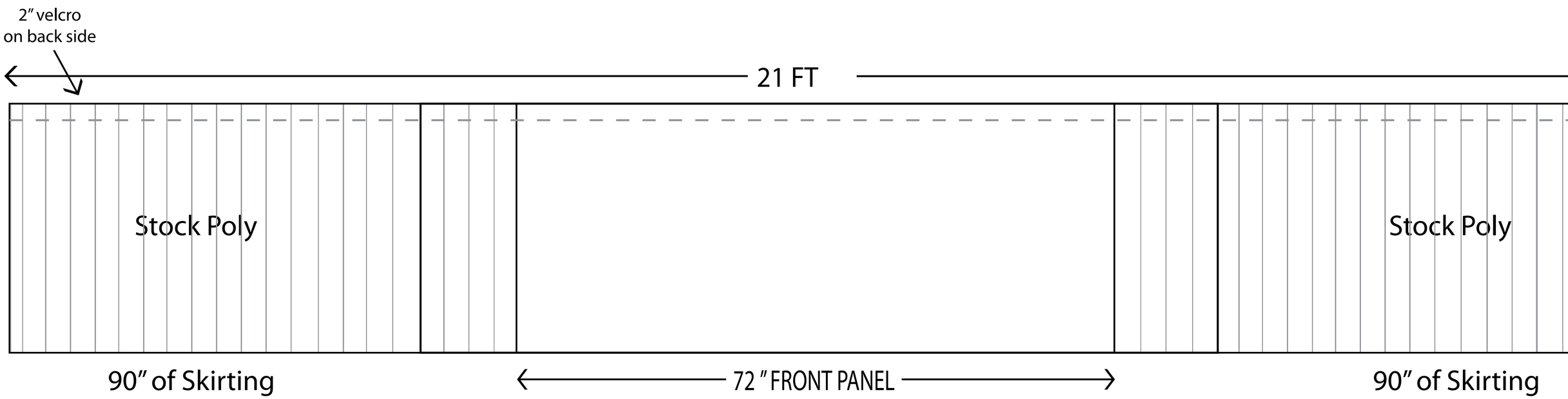

Digitally Printed 21' Box Pleated Table Skirt

Design Questions?

Contact our Art Department

via email: graphics@premiertablelinens.com

Print Project Information:

Date:

Quantity:

Cloth Color:

Graphic Size: "L x "H

Print Method:

SPOT ☐ ☐ ☐ ☐ ☐ **or** **CMYK**

please drop PMS colors into inkwells above

PLEASE:

Do not change template size.
Leave template CMYK.
Do not flatten template.
Place your art on ARTWORK LAYER

All fonts MUST be outlined
All critical elements must be within guide box
Noncritical elements may bleed to edge
Images should be at least 150 DPI and embeded